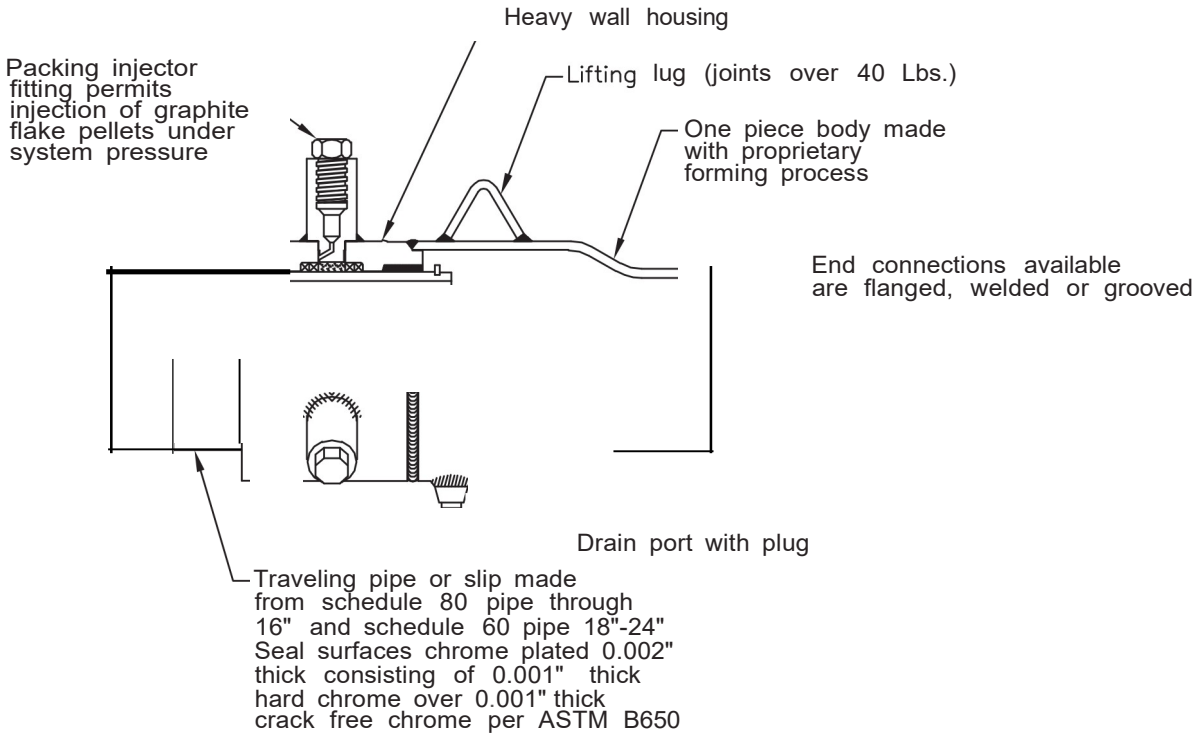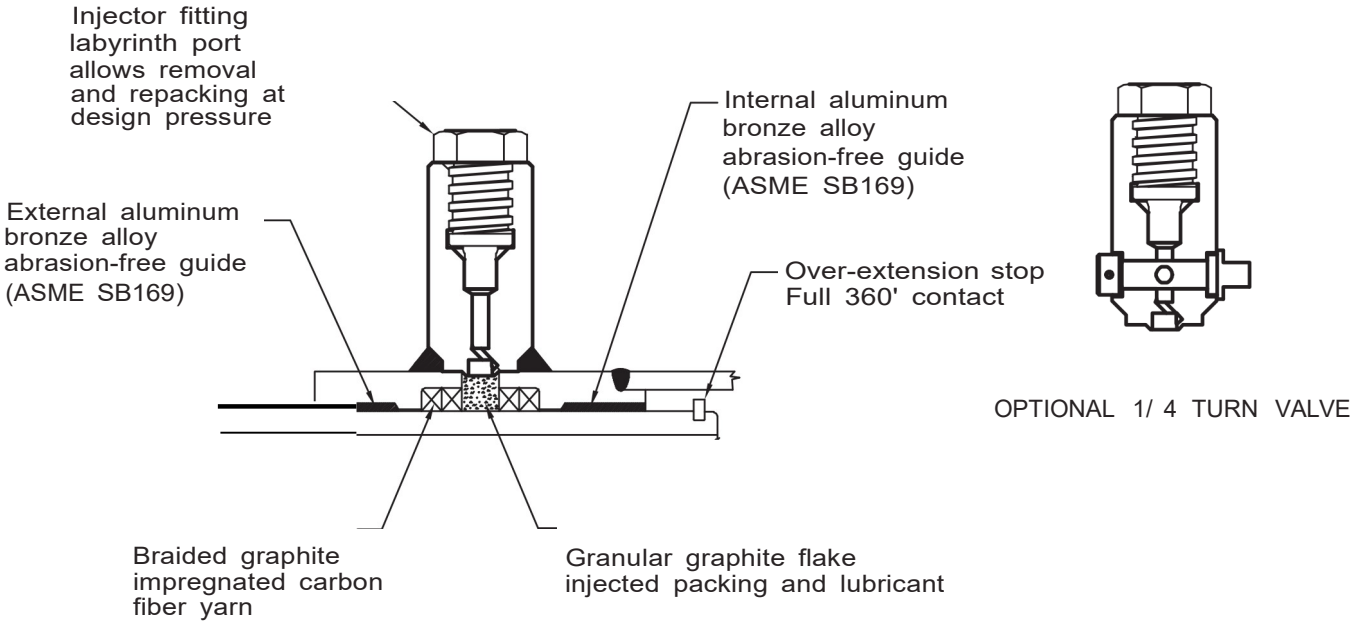Design Features